5. **Latihan Soal**

a) **1 unit = 10mm**

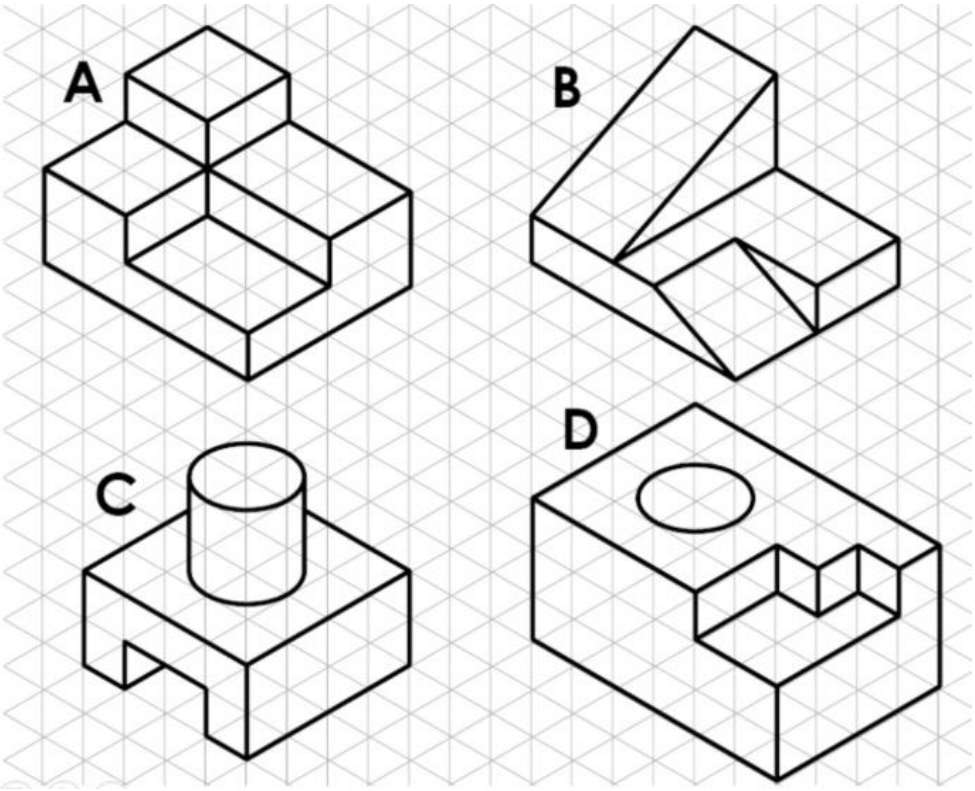

b)

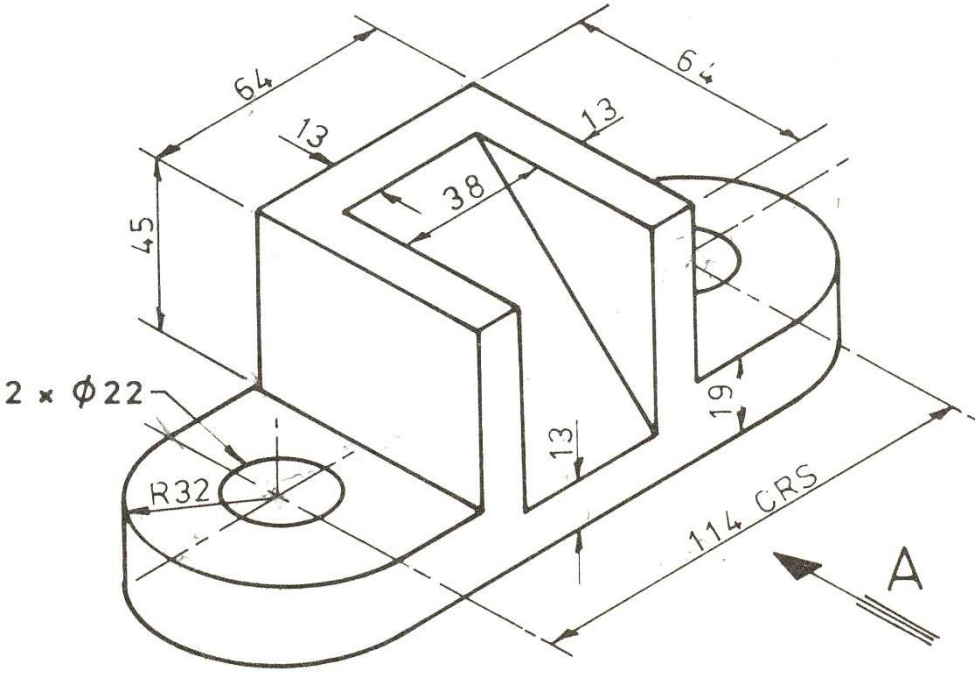

c)

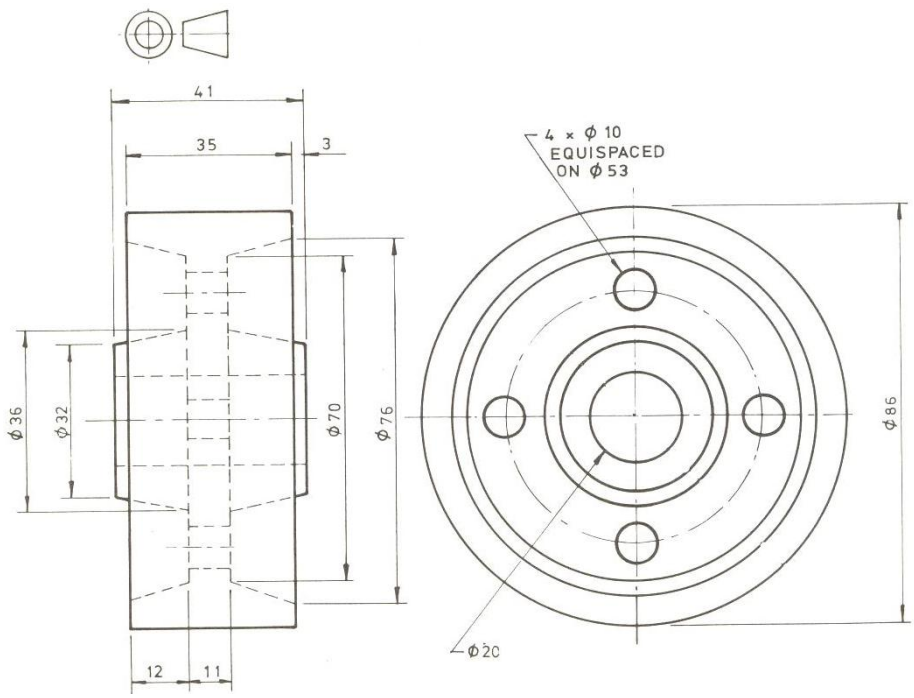
41
35
3
4 × ϕ 10
EQUISPACED
ON ϕ 53
ϕ 36
ϕ 32
ϕ 70
ϕ 76
ϕ 86
ϕ 20
12
11

d)

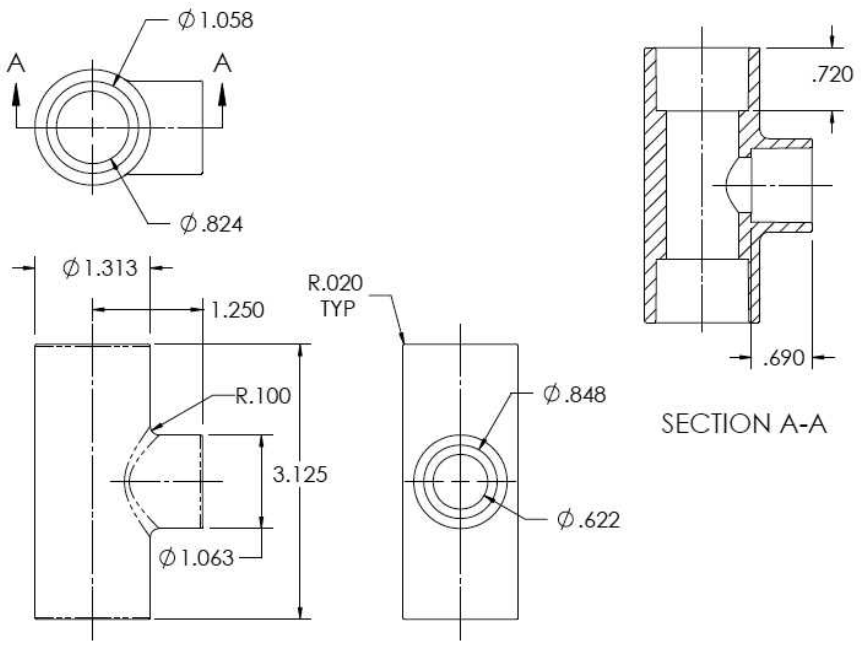
ϕ 1.058
A
A
ϕ .824
ϕ 1.313
1.250
R.020
TYP
R.100
3.125
ϕ 1.063
ϕ .848
ϕ .622
.720
.690
SECTION A-A